SLA SPORTS LIGHT

For Sports & Entertainment Applications

Introduction

- SLA sports light offers superior illumination, exceeding the performance of traditional lighting systems with significantly improved lumen output and energy efficiency. It provides exceptional light quality, minimising glare and enhancing visibility for athletes and spectators.
- Separated Driver box design can be installed on the light fixture holder and the light pole, and can also be installed on the distribution box. The modular design and user-friendly installation process make the SLA sports light incredibly easy to install and maintain.
- SLA sports light is equipped with advanced thermal management systems and robust driver technology. It is designed to withstand demanding conditions and deliver consistent performance over an extended period, significantly reducing the need for frequent replacements and minimising operational costs.
- This sports light is highly versatile and adaptable to stadiums set up in middle and high schools. It is also ideal for community stadiums, community training pitches, and non-televised non-professional stadiums.

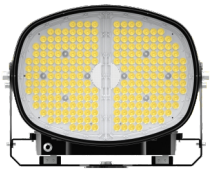

White LED

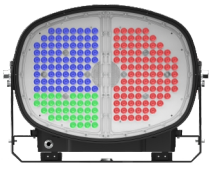

RGB LED

Product Specifications

Construction:

- Die-casting aluminum housing and durable surface powder coating spray.

Electrical:

- Equipped with a 0-10V dimmable driver. The fixtures do not have dimming wires led out by default; an additional cost will be required for modification to include them.
- The Input voltage is 120-277VAC/200-480VAC (50/60Hz) with standard 20kV Surge protector.
- 3ft(35.4") long power cord provided for easier installation.

Optics:

- Single CCT (4000K, 5000K, 5700K), CRI > 70 or RGB (Red, Green, Blue) available.
- Four distributions NEMA 2H2V, NEMA 3H3V, NEMA 4H4V and NEMA 5H5V optional.

Finish:

- Black is Standard.

Control:

- RGB LED Model controllable with DALI-2, D4i.
- 120-277Vac White LED Model only controllable with 0-10V dimming.
- 200-480Vac White LED Model controllable with 0-10V dimming, DALI-2, D4i.

Mounting:

- Yoke mount and pendant mount.

Ambient Temperature:

- -40° F (-40° C) to 122°F (50°C)

Compliances:

- cULus listed for wet locations.
- DLC® (DesignLights Consortium) Qualified. Please refer to the DLC website for specific product qualifications at www.designlights.org.

Warranty:

- 10-year limited warranty. Complete warranty terms located at: https://xsylights.com/warranty/

Ordering Guide

EXAMPLE: XSLA800W50KHV33

Brand X	Product name SLA	Wattage XXXW	CCT XXX	Input Voltage AA	Dist.Type YY
CPS	SLA	800W 600W 480W	40K=4000K 50K=5000K 57K=5700K RGB=RGB	UV=120-277VAC HV=200-480VAC (White LED) HV=277-480VAC (RGB LED)	22=2H2V 33=3H3V 44=4H4V 55=5H5V

Performance Data

White LED

Lumen values are based on 120V AC input product configuration, contact for performance data on any configurations not shown here

Model	NEMA	Watts	4000K		5000K		5700K		EPA (sq.ft.)		
			Lumens	LPW	Lumens	LPW	Lumens	LPW	Front	Side	Top
XSLA600WXXXAA22	2H2V	600	94,200	142	94,200	142	94,800	142	2.44	1.43	2.75
XSLA600WXXXAA33	3H3V	600	94,200	157	94,200	157	94,800	158	2.44	1.43	2.75
XSLA600WXXXAA44	4H4V	600	94,200	157	94,200	157	94,800	158	2.44	1.43	2.75
XSLA600WXXXAA55	5H5V	600	94,200	157	94,200	157	94,800	158	2.44	1.43	2.75
XSLA800WXXXAA22	2H2V	800	124,000	138	124,800	138	125,600	138	2.44	1.43	2.75
XSLA800WXXXAA33	3H3V	800	124,000	155	124,800	156	125,600	157	2.44	1.43	2.75
XSLA800WXXXAA44	4H4V	800	124,000	155	124,800	156	125,600	157	2.44	1.43	2.75
XSLA800WXXXAA55	5H5V	800	124,000	155	124,800	156	125,600	157	2.44	1.43	2.75

RGB LED

Model	Watts		Lumen	RGB	Input voltage
XSLA480WRGBAAYY	480W	R:180W	7,520lm	Red	120-277VAC/277-480VAC 50/60Hz
		G:100W	5,410lm	Green	
		B:200W	5,720lm	Blue	

EPA

With Glare Shield & With Driver Box

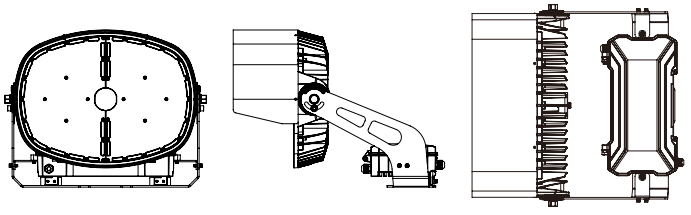

2.44 sq. ft 1.43 sq. ft 2.75 sq. ft

Without Glare Shield & With Driver Box

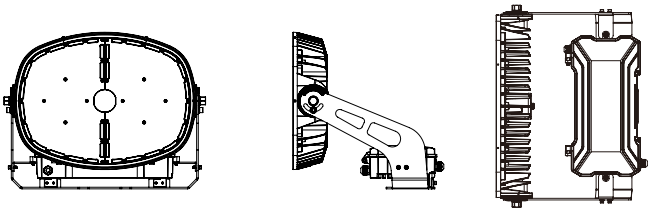

2.41 sq. ft 0.86 sq. ft 1.68 sq. ft

With Glare Shield & Without Driver Box

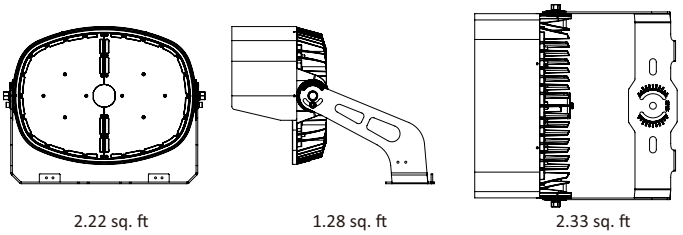

2.22 sq. ft 1.28 sq. ft 2.33 sq. ft

Without Glare Shield & Without Driver Box

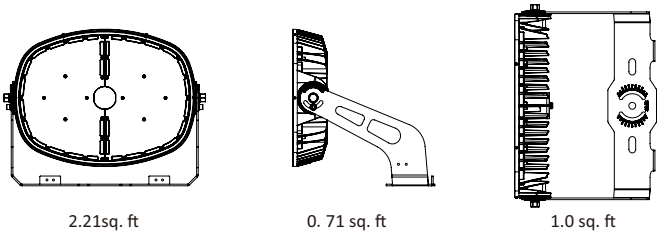

2.21sq. ft 0. 71 sq. ft 1.0 sq. ft

Photometrics

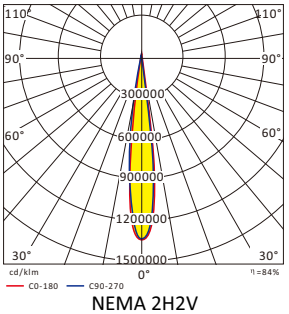

NEMA 2H2V
for White LED model
(Lens changing needed)

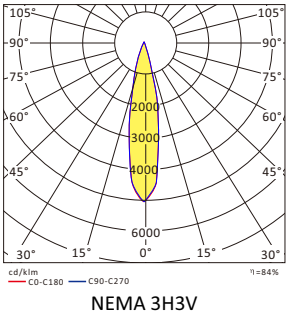

NEMA 3H3V
for White LED model
(As standard offer)

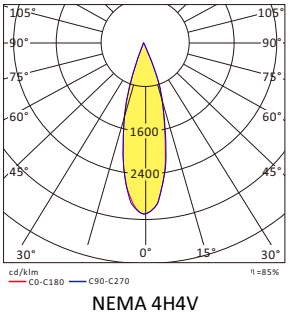

NEMA 4H4V
for White LED model
(Lens changing needed)

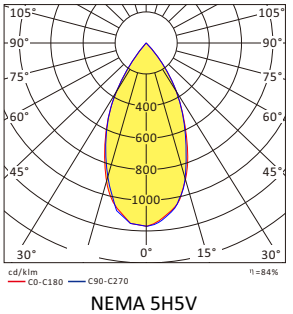

NEMA 5H5V
for White LED model
(Lens changing needed)

Accessories

Laser Aiming Set

Field-Installable / Field-Use ONLY (purchased separately)

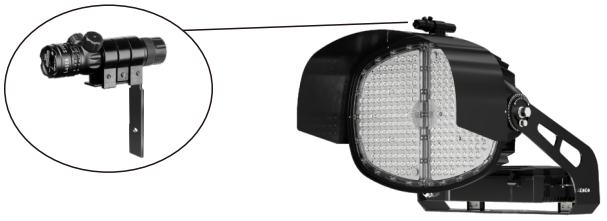

XLAS-A-B
Laser Aiming Set for XSLA

Synapse Module

Field-Installable / Field-Use ONLY (purchased separately)

DIM10-087-06-A
Synapse module wireless controller,
for RGB LED at 120-277Vac or 200-480Vac
for White LED at only 277-480Vac

Mounting Information

Junction Box Cover

Field-Installable / Field-Use ONLY (purchased separately), and comes with separate box with fixture.

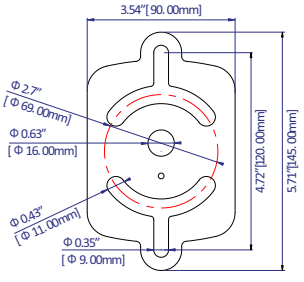

SLAJBC-A
Junction Box Cover for SLA, used to cover oversized holes on the light pole, ensuring secure installation and a clean appearance.

Tenon Adaptor

Field-Installable / Field-Use ONLY (purchased separately), and comes with separate box with fixture.

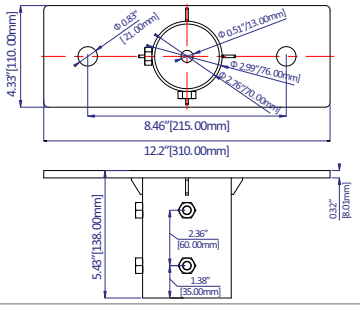

SLATA-A-B
Tenon Adaptor for SLA, allows the fixture to be mounted onto round poles, providing stability and ease of installation.

Diving Board Kit

Field-Installable / Field-Use ONLY (purchased separately), and comes with separate box with fixture.

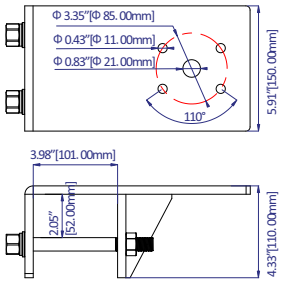

SLADBK-A-B

Diving Board Kit for SLA, used when there are no pre-drilled mounting holes on the light pole, allowing secure installation of the fixture.

Electrical Data

Model Series	Wattage(W)	Current (A)				
		Input Voltage (V)				
		120	200	240	277	480
XSLA600WXXX	600	5.56	3.33	2.78	2.41	1.39
XSLA800WXXX	800	7.41	4.44	3.70	3.21	1.85
XSLA480WRGB	480	4.44	2.67	2.22	1.93	1.11

Dimensions

With Glare Shield (Standard)

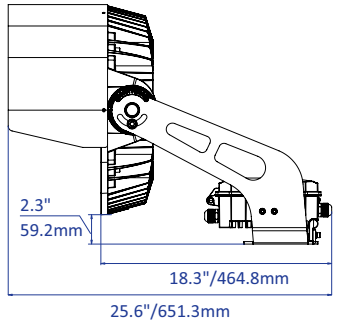

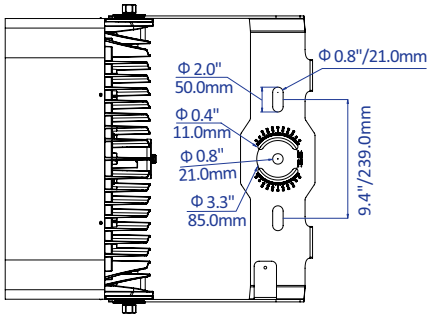

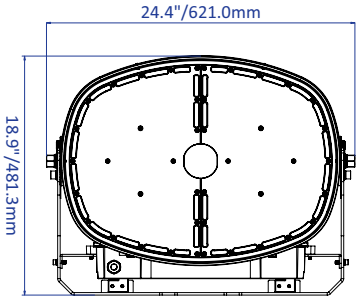

Without Glare Shield

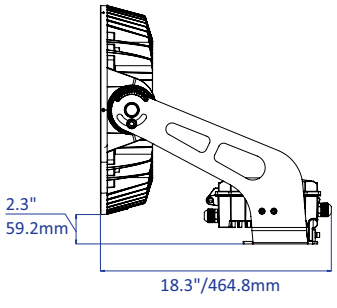

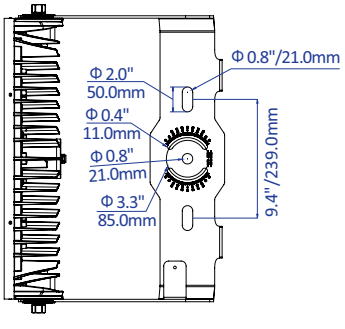

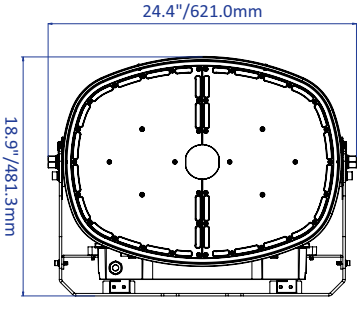

Shipping Information

Model	Carton Size (in)	G.W. (lbs)	Qty Per Carton (pcs)	Qty Per Pallet (pcs)	Weight Per Pallet (lbs)	Pallet Size (in)
XSLA600W	29.3x27.2x10.0	61	1	14	864	48.0x40.0x92.0
XSLA800W	29.3x27.2x10.0	61	1	14	864	48.0x40.0x92.0
XSLA480W	29.3x27.2x10.0	61	1	14	864	48.0x40.0x92.0

Note: The packaging data can sometimes be outdated or incomplete. For the most reliable information, please reach out to us directly.